S8WS-14L323-A

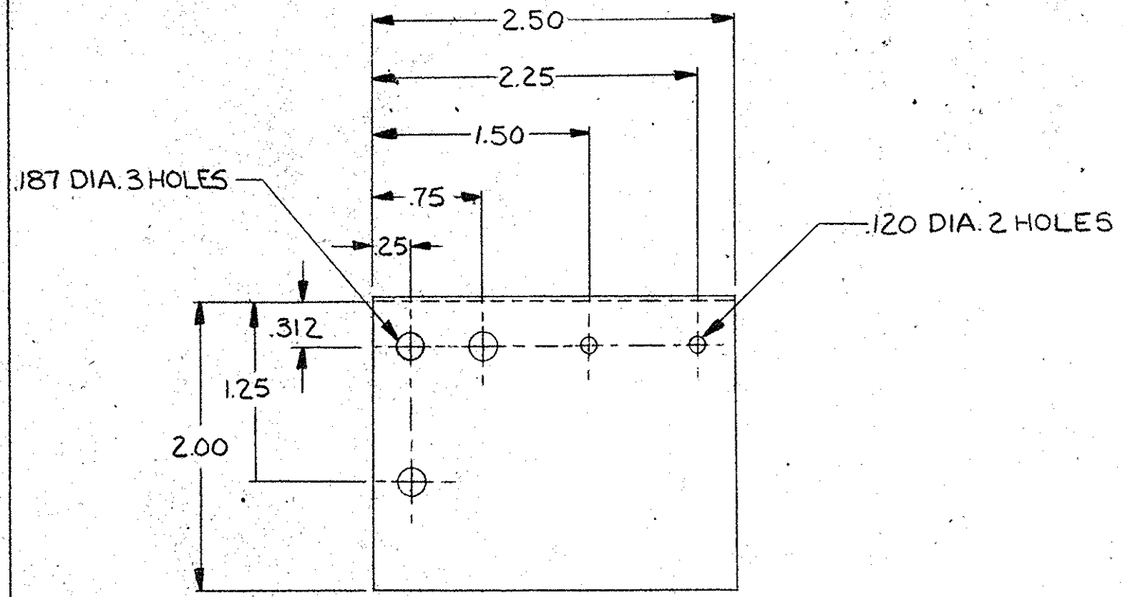

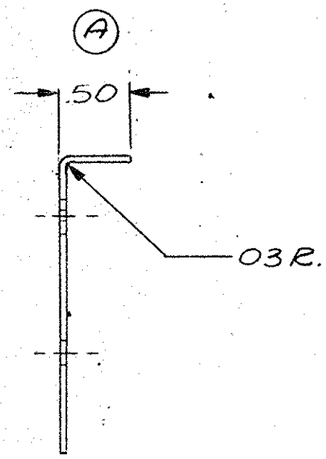

NOTE-
UNLESS OTHERWISE SPECIFIED-
SAMPLE TO BE APPROVED BY
ENG. DEPT. PRIOR TO PRODUCTION.

A

E.C. NO.	CHG. LET.	REVISIONS	DATE	BY	CK.
	B	PART NO WAS 19370	3-8-68	RZ	[illegible]
	A	FLANGE REVISED	3-1-68	CE	[illegible]
	—	REL. FOR PRODUCTION	2-19-68	[illegible]	RZ

CUSTOMER MODEL NO. 65	IONIA MODEL NO. 1968 COUGAR
SUPERSEDES	SUPERSEDED BY
REF.	NEXT ASSY.
EXP. NO.	LAYOUT NO.

SMITH PLASTICS DIVISION

A.O. Smith Corporation
IONIA, MICHIGAN
PRODUCT ENGINEERING

TITLE
BRACKET-CIRCUIT BREAKER EXTENSION

MATERIAL .036 THK. ALUMINUM

DRAWN	DATE	SCALE	PART NUMBER
C.E.	2-16-68	FULL	S8WS-14L323-A
CHECKED	APPROVED	ENGINEER	
R.ZEIGLER	[illegible]	[illegible]	